Edge design

Section A-A

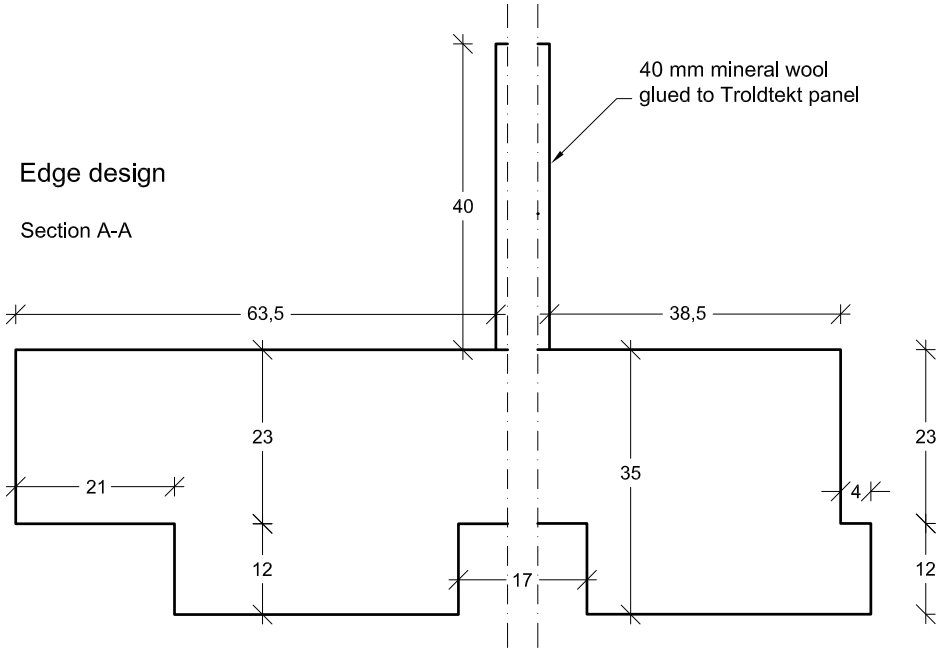

Modular dimensions (mm) : 600 x 1190

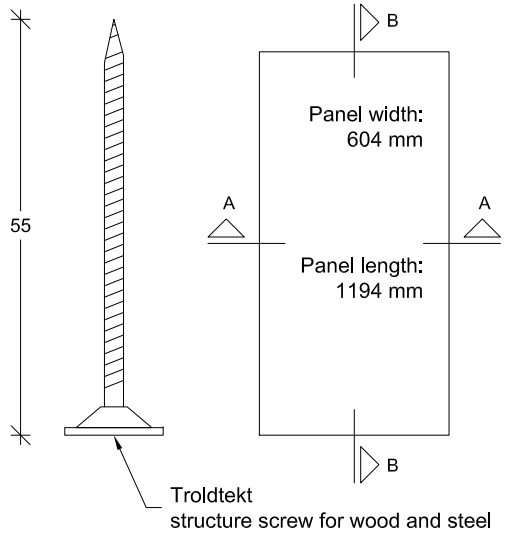

Cross section A-A

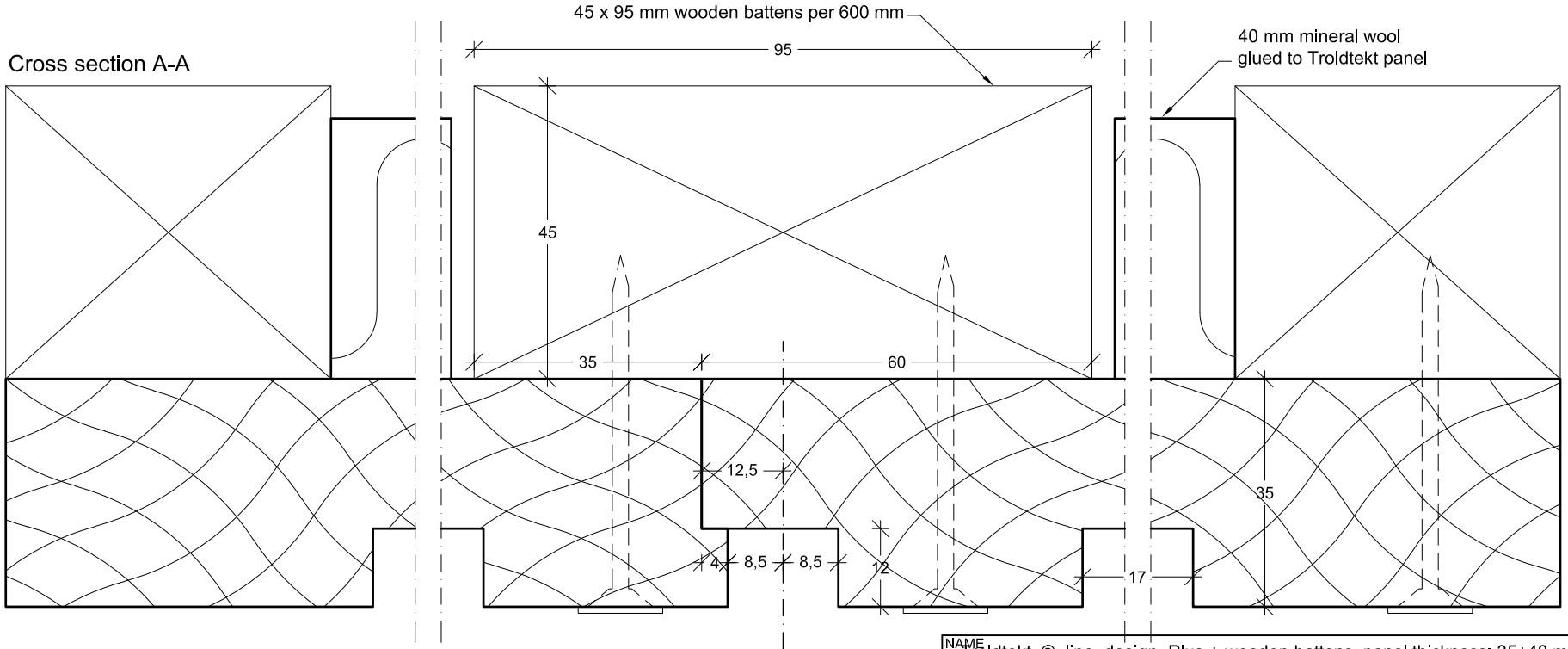

NAME	Troldtekt_®_line_design_Plus + wooden battens, panel thickness: 35+40 mm			Troldtekt.
CONTENT			Cross section A-A	
SCALE 1:1	INIT. MCH	REV. NO.	DATE 14-06-2021	

Troldtekt_®_line_design_f_35+40mm_EN.dwg

Modular dimensions (mm) : 600 x 1190

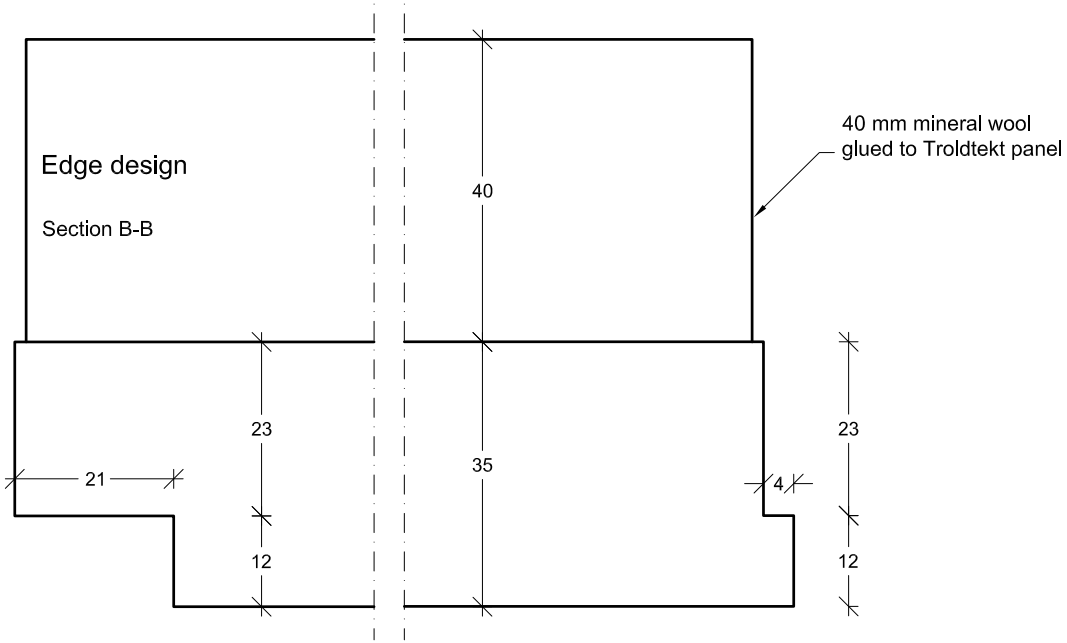

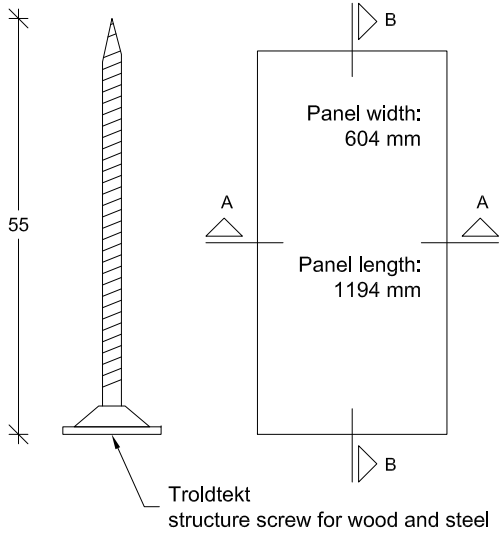

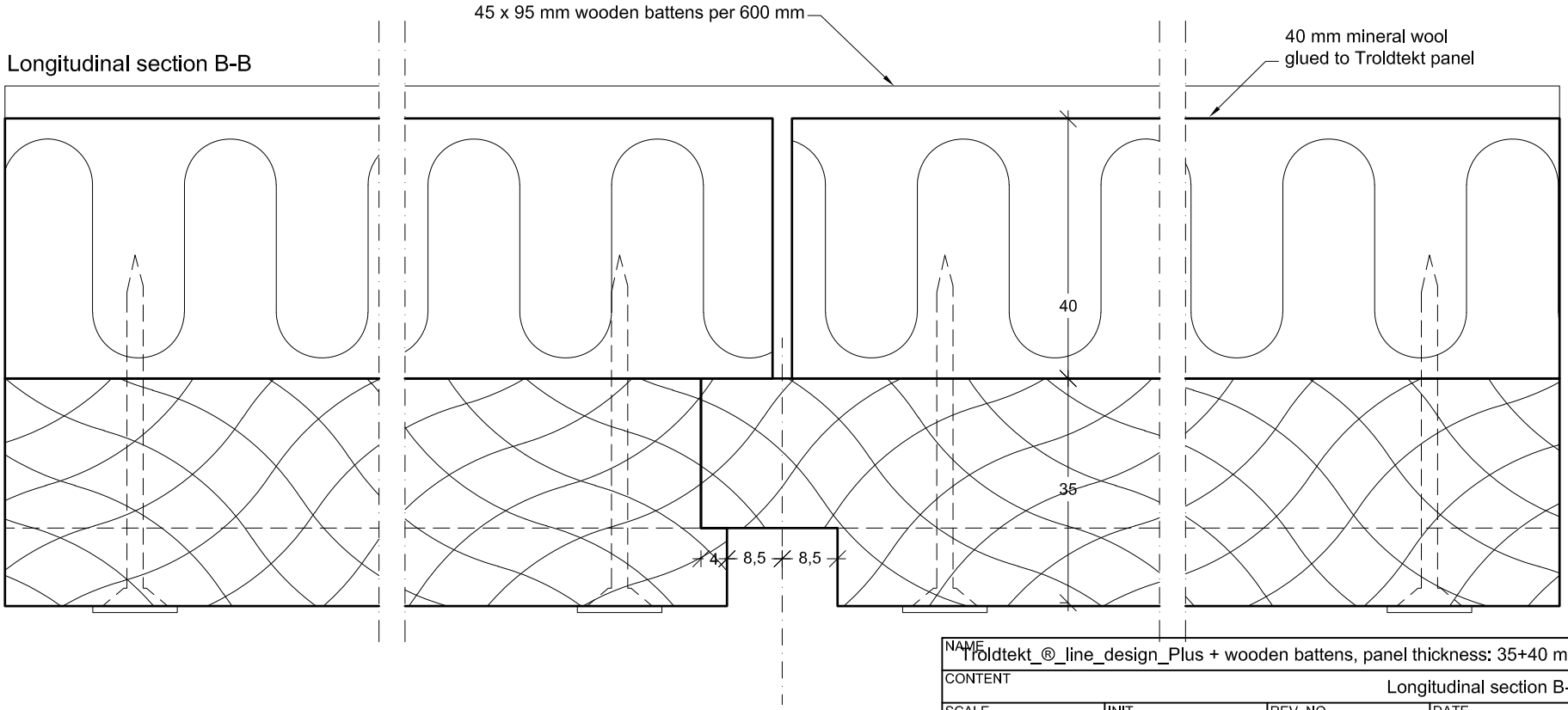

NAME	Troldtekt_®_line_design_Plus + wooden battens, panel thickness: 35+40 mm			Troldtekt.
CONTENT	Longitudinal section B-B			
SCALE 1:1	INIT. MCH	REV. NO.	DATE 14-06-2021	

Troldtekt_®_line_design_f_35+40mm_EN.dwg