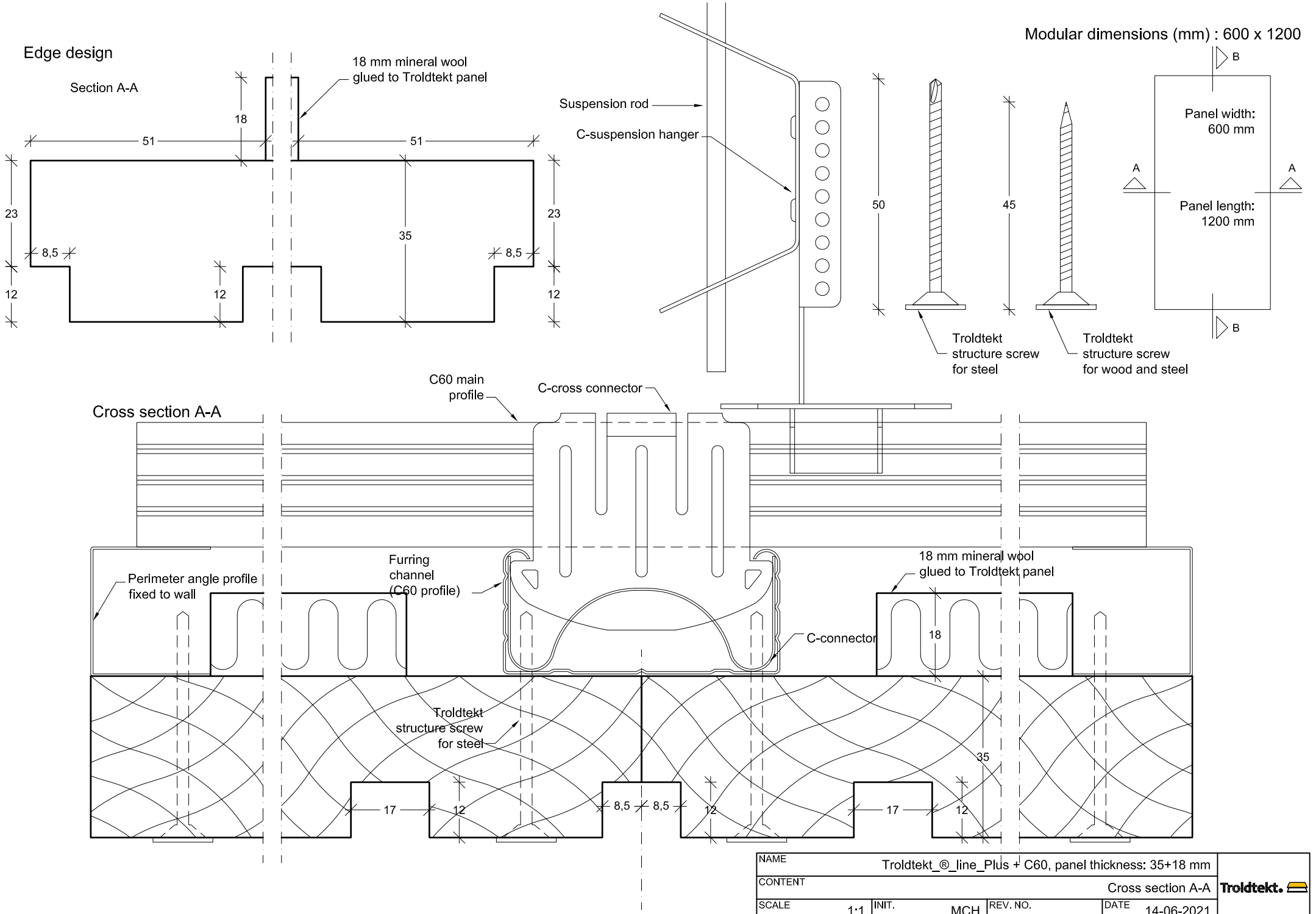
Edge design
Section A-A
18 mm mineral wool
glued to Troldtekt panel
18
51
51
23
23
8,5
8,5
35
12
12
12
Suspension rod
C-suspension hanger
50
45
Troldtekt
structure screw
for steel
Troldtekt
structure screw
for wood and steel
Modular dimensions (mm) : 600 x 1200
B
B
A
A
Panel width:
600 mm
Panel length:
1200 mm
C60 main
profile
C-cross connector
Cross section A-A
Perimeter angle profile
fixed to wall
Furring
channel
(C60 profile)
18 mm mineral wool
glued to Troldtekt panel
C-connector
18
Troldtekt
structure screw
for steel
35
17
12
8,5
8,5
12
17
12
NAME
Troldtekt_®_line_Plus + C60, panel thickness: 35+18 mm
CONTENT
Cross section A-A
SCALE
1:1
INIT.
MCH
REV. NO.
DATE
14-06-2021
Troldtekt.
Troldtekt_®_line_c60_35+18mm_EN.dwg

Edge design

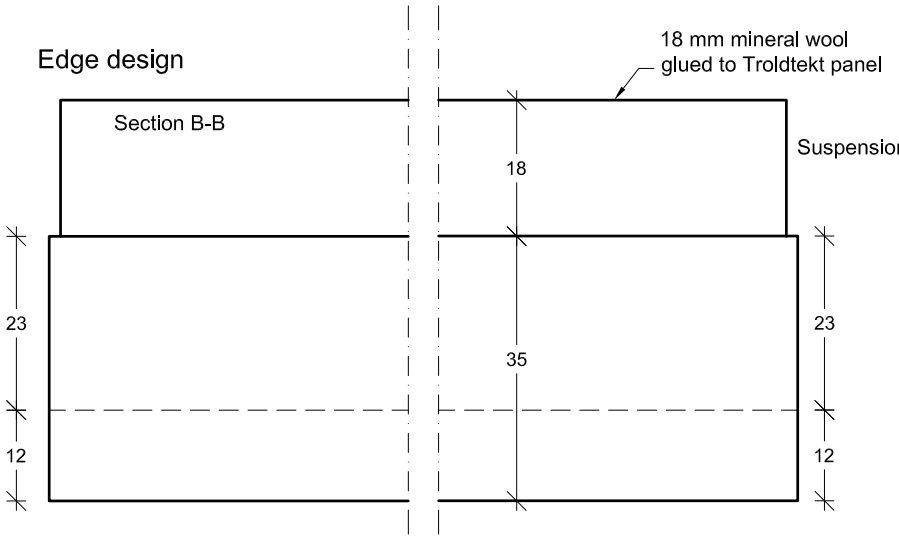

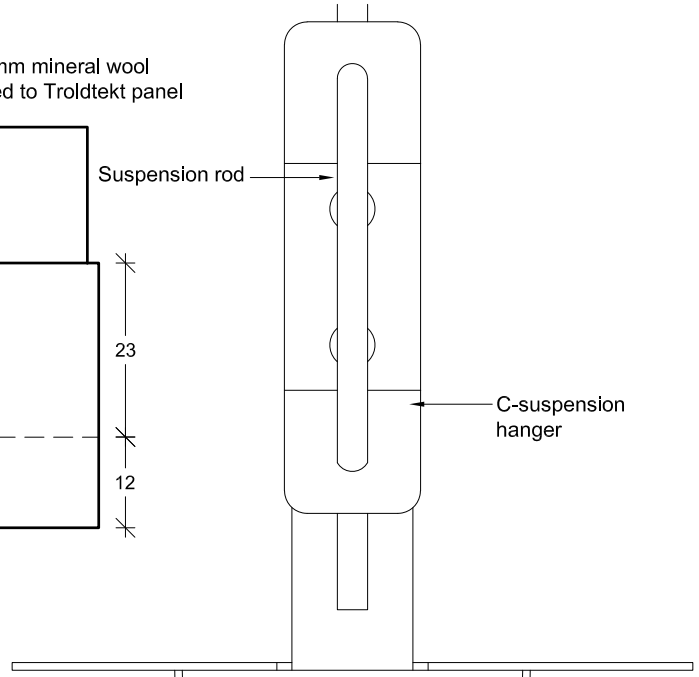

Modular dimensions (mm) : 600 x 1200

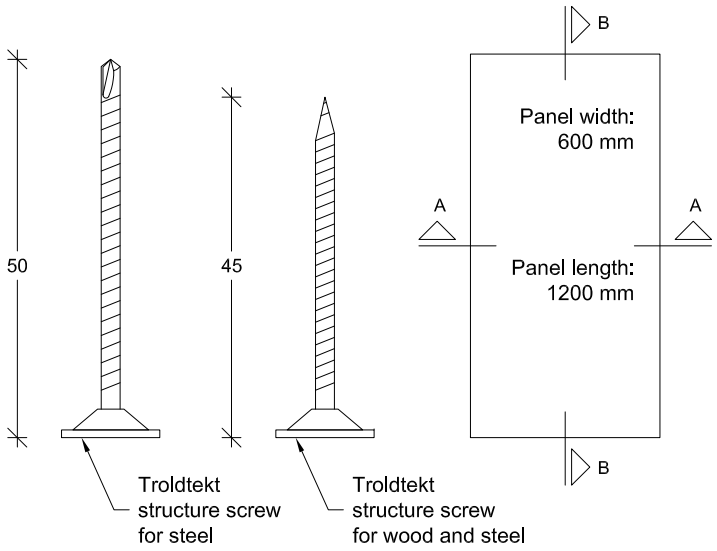

Longitudinal section B-B

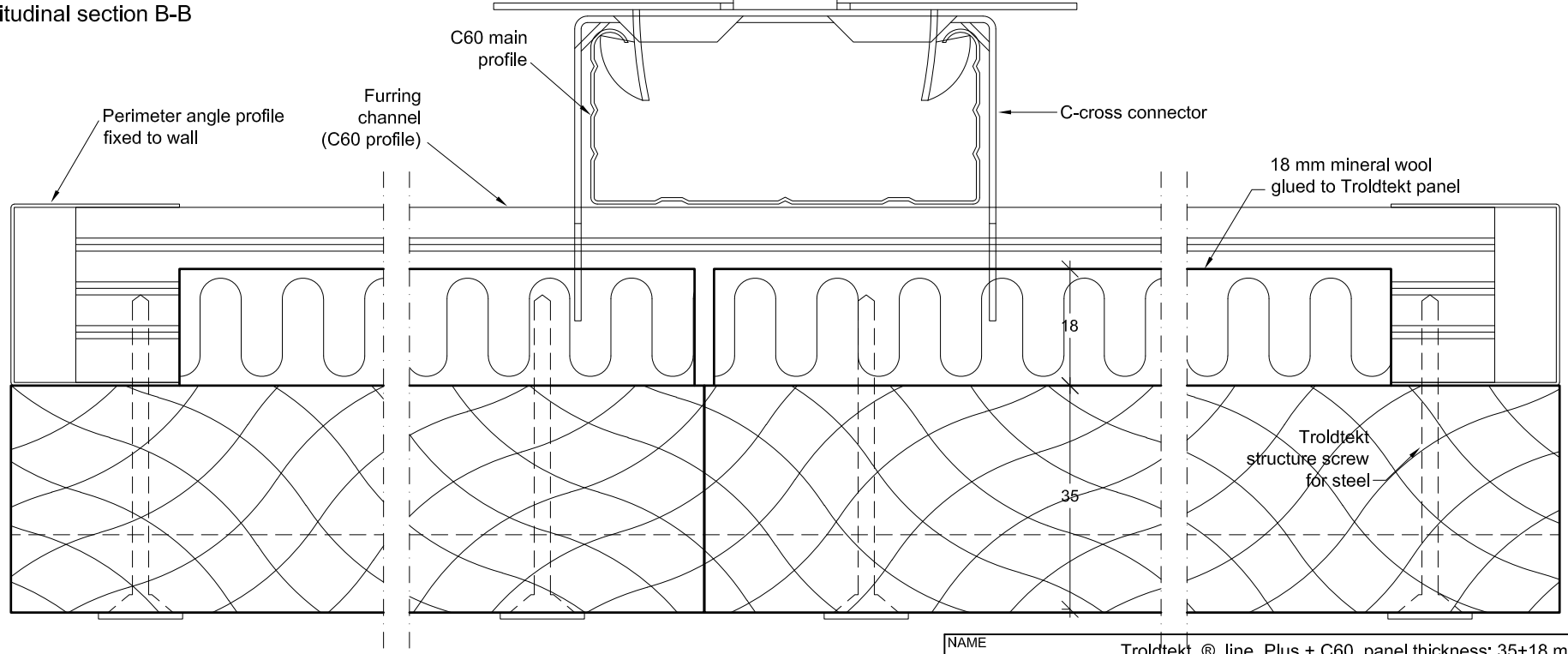

NAME	Troldtekt_®_line_Plus + C60, panel thickness: 35+18 mm			Troldtekt.
CONTENT	Longitudinal section B-B			
SCALE 1:1	INIT. MCH	REV. NO.	DATE 14-06-2021	

Troldtekt_®_line_c60_35+18mm_EN.dwg